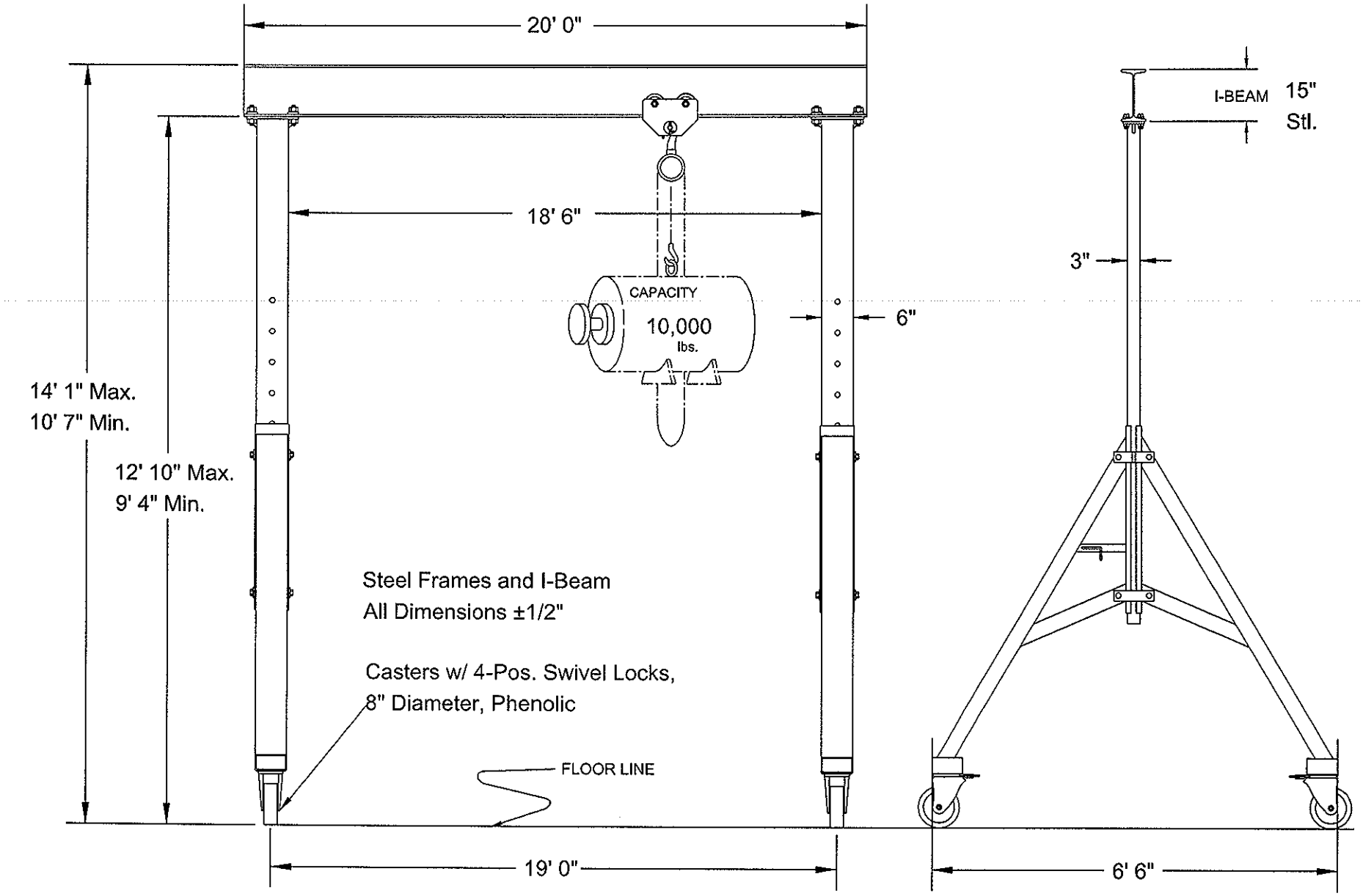

Model 1012-20AC

© Copyright Wallace Cranes 2014. All rights reserved.

UNLESS OTHERWISE SPECIFIED DIMENSIONS ARE IN INCHES TOLERANCES ON FRACTION ±1/8" DECIMAL ±0.5"			Wallace Cranes MALVERN, PENNSYLVANIA
DRAWN BY JJF	DATE 10-15-14		TITLE THRIFTY GANTRY ADJUSTABLE
CHECKER			SCALE NTS · WT. · DWG SIZE C · DRAWING No. · REV.
APPROVAL			

SYM	DESCRIPTION	DATE	INT.
	CONVERTED TO CAD DRAWING		

REVISIONS