Model 17 - Adjustable Lifting Beam

PRODUCT FEATURES:

- Bail adjusts horizontally for lifting unbalanced loads.
- Provides clearance in low headroom applications.
- Spread adjusts in 6” increments along lifting beam.
- Shackles included.
- Optional swivel hooks available.
- Complies with ASME standards.

PRODUCT OPTIONS:

- **OPTION S** - Pair of swivel hooks

QUICKSHIP PROGRAM

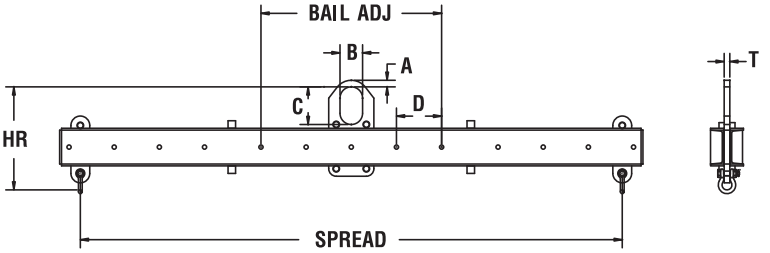

SPECIFICATIONS

Model Number	Rated Capacity (tons)	Spread (in.)		Bail Adjustment		HR Headroom (in.)	Shackle Size (tons)	Bail Dimensions (in.)				Weight (lbs.)
		Max.	Min.	Range (in.)	D (in.)			A	B	C	T	
17-1 1/4-6	1-1/4	72	36	24	3	14.7	2	1 1/2	3	5	5/8	150
17-2-6	2	72	36	24	3	14.7	2	1 1/2	3	5	5/8	155
17-4-8	4	96	54	36	6	19.8	3 1/4	2	4	7	3/4	285
17-5-10	5	120	60	36	6	22.4	4 3/4	2	4	7	1	475
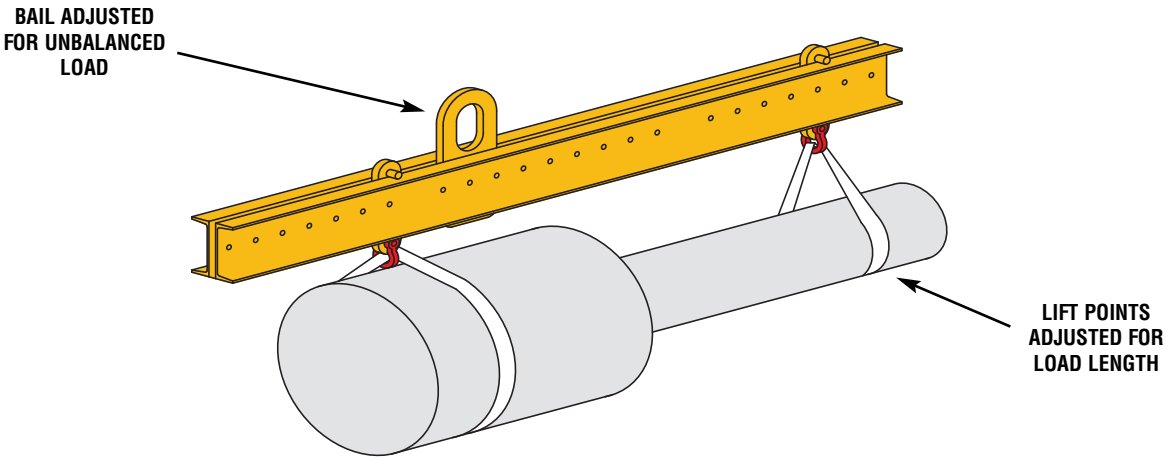
Operation