Cyclone Army type trolley hoist

Same quality and performance as the Cyclone in a compact, low headroom integral trolley mount. Ideal for applications requiring a moveable hoist including:

- Rugged steel loadbars connected directly to hoist frame
- Reduced headroom, side clearances and end approach for easy maneuvering of heavy loads in tight places
- Standard Load Limiter automatic overload protection
- Plain and geared trolley mounts in capacities from 1/4 to 12 tons
- Universal tread trolley wheels for operation on sloped or flat flanged beams
- Standard hand chain drop 2 feet less than lift (example: 8 foot lift hoist has 6 foot hand chain drop)
- Chain containers, zinc-plated load and hand chain, aluminum unwelded hand chain, Latchlok hooks, bronze hooks, bullard hooks, larger beam trolleys, trolley guards, and units without Load Limiter optional, depending on capacity
- Lifetime warranty
- Metric rated
- Made in U.S.A.

*** ipt WARNING**

Overloading and improper use can result in injury.

To avoid injury:
- Do not exceed working load limit, load rating capacity
- Do not use to lift people or loads over people.
- use only alloy chain for overhead lifting.
- Read and follow all instructions.

Specifications

Rated capacity* (tons)	Product code: Plain trolley	Product code: Geared trolley	Standard lift (ft.)	Reeving	American standard depth (in.)†	Beam adjustment ranges flange width (in.)†	Chain pull to lift capacity loads (lbs.)	Chain overhauled to lift load one foot (ft.)	Min. headroom (in.)	Min. radius curve (in.)	Shipping weight (lbs.): Plain trolley	Shipping weight (lbs.): Geared trolley
¼	4521	4541	8	1	4-12**	2⅝-5½	23	22½	11¾	30	66	108
½	4522	4542	8	1	4-12**	2⅝-5½	46	22½	11¾	30	66	108
1	4524	4544	8	1	4-12**	2⅝-5½	69	30	11¾	30	78	130
1½	4525	4545	8	1	6-15	3⅜-5⅝	80	40½	15 5/16	30	136	164
2	4526	4546	8	1	6-15	3⅜-5⅝	83	52	15 5/16	30	136	164
3	4527	4547	8	2	7-15	3⅝-5⅝	85	81	8⅞	48	182	230
4	4528	4548	8	2	7-15	3⅝-5⅝	87	104	18⅞	48	182	230
5	4529	4549	8	3	8-18	4-6¼	74	156	23½	60	268	300
6	4530	4550	8	3	8-18	4-6¼	89	156	24	60	273	305
8	4531	4551	8	4	12-24	5-8	91	208	28¼	72	506	589
10	4532	4552	8	5	12-24	5-8	93	260	28¼	72	513	596
12	4533	4553	8	6	15-24	5½-8	95	312	30⅜	96	1050	1130

** For 1/4 through 1 ton geared trolleys - minimum beam size S6 x 12.5 (3 3/8 flange width)

† Universal tread track wheels designed to operate on either sloped or flat flange beam, rails or tracks

Cyclone Army type trolley hoist

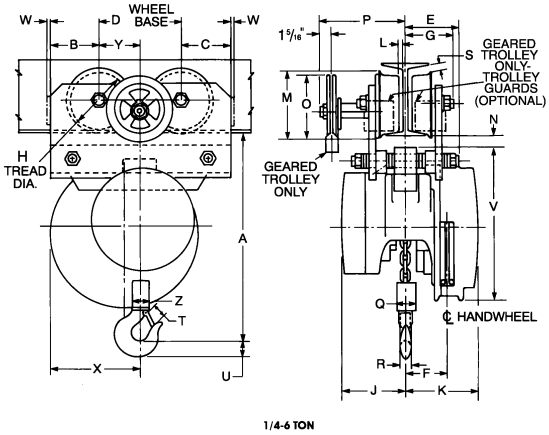

1/4 - 6 ton

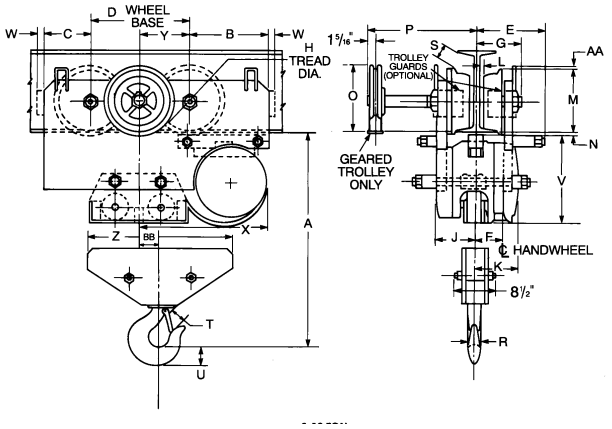

8 - 12 ton

Clearance dimensions (in.)

Dimen-sion	Rated capacity* (tons)															
	1/4, 1/2 & 1		1 1/2 & 2		3 & 4		5		6		8		10		12	
	Plain	Geared	Plain	Geared	Plain	Geared	Plain	Geared	Plain	Geared	Plain	Geared	Plain	Geared	Plain	Geared
A	11 3/4	11 13/16	15 5/16	15 5/16	18 7/8	18 7/8	23 1/2	23 1/2	24	24	28 1/4	28 1/4	28 1/4	28 1/4	30 3/8	30 3/8
B	4 3/16	4 3/6	3 11/16	3 11/16	5 3/4	5 3/4	6 1/2	6 1/2	6 1/2	6 1/2	8 15/16	8 15/16	8 15/16	8 15/16	10 7/8	10 7/8
C	2 9/16	2 9/16	3 11/16	3 11/16	3 7/16	3 7/16	3 3/4	3 3/4	3 3/4	3 3/4	5 1/4	5 1/4	5 1/4	5 1/4	7 3/16	7 3/16
D	6	6	6	6	6 7/8	6 7/8	7 3/4	7 3/4	7 3/4	7 3/4	11	11	11	11	11	11
E	4 1/2	4 15/16	5	5	5 7/16	5 7/16	6 1/8	6 1/8	6 1/8	6 1/8	7 1/4	7 1/4	7 1/4	7 1/4	7 1/4	7 1/4
F	2 1/16	2 1/16	3 1/8	3 1/8	3	3	2 13/16	2 13/16	2 13/16	2 13/16	3	3	3	3	3	3
G	3	3 3/4	3 5/8	3 3/4	4 5/16	4 5/16	4 15/16	4 15/16	4 15/16	4 15/16	5 9/16	5 9/16	5 9/16	5 9/16	5 13/16	5 13/16
H	3 1/8	4	4 3/4	4	5	5	6	6	6	6	8	8	8	8	8	8
J	3 1/4	3 1/4	4 13/16	4 13/16	4 13/16	4 13/16	5	5	5	5	4 13/16	4 13/16	4 13/16	4 13/16	4 13/16	4 13/16
K	4 1/8	4 1/8	5 1/16	5 1/16	5 1/16	5 1/16	4 7/8	4 7/8	4 7/8	4 7/8	5 1/16	5 1/16	5 1/16	5 1/16	5 1/16	5 1/16
L	5/16	5/16	1/2	5/16	1/4	1/4	3/8	3/8	3/8	3/8	1/2	1/2	1/2	1/2	1 1/16	1 1/16
M	4	4 3/4	5 9/16	4 3/4	5 7/8	5 7/8	7	7	7	7	9 7/16	9 7/16	9 7/16	9 7/16	9 1/2	9 1/2
N	1/2	9/16	9/16	9/16	1 1/16	1 1/16	1 1/16	1 1/16	1 1/16	1 1/16	1/2	1/2	1/2	1/2	7/16	7/16
O	–	5 9/16	–	5 9/16	6 1/8	6 1/8	6 3/4	6 3/4	6 3/4	6 3/4	7 9/16	7 9/16	7 9/16	7 9/16	7 3/16	7 3/16
P	–	10	–	10	8 15/16	8 15/16	10 7/16	10 7/16	10 7/16	10 7/16	11 7/16	11 7/16	11 7/16	11 7/16	11 11/16	11 11/16
Q	2	2	2 1/2	2 1/2	3 7/8	3 7/8	4	4	4	4	11 15/16	1 15/16	–	–	–	–
R	11/16	11/16	1 1/8	1 1/8	1 1/4	1 1/4	1 1/4	1 1/4	1 3/8	1 3/8	11 3/16	1 13/16	1 13/16	1 13/16	2 3/8	2 3/8
S	1/16	15/16	3/16	15/16	15/16	15/16	3/4	3/4	3/4	3/4	2 3/16	2 3/16	2 3/16	2 3/16	5 1/16	5 1/16
T	1	1	1 3/8	1 3/8	1 5/8	1 5/8	1 5/8	1 5/8	1 3/4	1 3/4	2 5/16	2 5/16	2 5/16	2 5/16	3	3
U	7/8	7/8	1 1/8	1 1/8	1 11/16	1 11/16	1 11/16	1 11/16	1 7/8	1 7/8	2 9/16	2 9/16	2 9/16	2 9/16	3	3
V	10 1/8	10 1/8	11 3/8	11 3/8	11 3/8	11 3/8	11 3/8	1 3/8	11 3/8	11 3/8	11 5/8	11 5/8	11 5/8	11 5/8	11 5/8	11 5/8
W	1/4	3/8	3/8	3/8	1/2	1/2	5/8	5/8	5/8	5/8	5/8	5/8	5/8	5/8	5/8	5/8
X	7 3/16	7 3/16	6 11/16	6 11/16	8 15/16	8 15/16	10 5/16	10 5/16	10 5/16	10 5/16	14 7/16	14 7/16	14 7/16	14 7/16	16 3/8	16 3/8
Y	3	3	3	3	3 7/16	3 7/16	3 7/8	3 7/8	3 7/8	3 7/8	5 1/2	5 1/2	5 1/2	5 1/2	5 1/2	5 1/2
Z	2	2	2 1/2	2 1/2	4 1/2	4 1/2	6 1/4	6 1/4	6 1/4	6 1/4	13 15/16	13 15/16	18 3/16	18 3/16	21 11/16	21 11/16
AA	–	–	–	–	–	–	–	–	–	–	3/8	3/8	3/8	3/8	3/8	3/8
BB	–	–	–	–	–	–	–	–	–	–	1 15/16	1 15/16	0	0	0	0

Note: Dimensions are based on minimum beam and may vary with larger beams.